Milesight

5MP 25X AI 5-inch Speed Dome Network Camera

Up to 70% Lower Power Consumption for Solar-powered Mobile Surveillance

360° Endless Pan	-10°~90° Tilt Range	5MP Image Resolution	25X Optical Zoom



NDAA

KEY FEATURES

- AI Intelligent Analytics
- PTZ Auto Tracking
- 120dB Super WDR
- IP66, IK10
- Support ONVIF GMST
- Metadata Transmission
- Ultra-low Power Consumption as low as 3.4W
- Flexible Pan, Tilt and Zoom Tasks
- 200m IR Length
- 60fps Frame Rate
- EIS with Gyroscope, -40°C to 70°C
- Multiple Interfaces (2*Alarm-In, 2*Alarm-Out)

AVAILABLE MODELS ▶ MS-C5342-X25RPG1 M1

AI Speed Dome Network Camera

	Model	MS-C5342-X25RPG1/M1 (5MP)
Camera	Image Sensor	1/2.8" Progressive Scan CMOS
	Min. Illumination	Color: 0.008Lux@F1.6, B/W: 0Lux with IR on
	WDR	120dB Super WDR
	Shutter Time	1/100000s~ 1s
	Day/Night Mode	Day/Night/Auto/Customize/Schedule
	S/N	>55dB
Lens	Lens	4.8~120mm, 25X Optical Zoom
	Optical Zoom	25X
	Digital Zoom	16X
	Zoom Speed	Approx 5.8s
	Field of View	H52.9°~H2.7°/D66°~D3.3°/V39.8°~V2.0°
	Focus Control	Auto/Semi-Auto/Manual
	Aperture	F1.6~F3.5
	Iris Type	Auto/Manual
Illuminator	IR Distance	Up to 200 m
	IR Wave Length	850nm
PTZ	Pan Range / Pan Speed	360° endless/ Pan Manual Speed: 0.1°~ 350°/s, Pan Preset Speed: 350°/s
	Tilt Range / Tilt Speed	-10°~ 90°(Auto Flip)/ Tilt Manual Speed: 0.1°~160°/s, Tilt Preset Speed: 160°/s
	Preset Quantity	300
	Preset Freezing	Support
	Patrol	8 Patrols, up to 48 presets each patrol
	Pattern	4 Patterns
	PTZ Status Display	Support
	Power Off Memory	Support

	Scheduled Task	Auto Scan, Preset, Patrol, Pattern, Self Check, Tilt Scan, Panorama Scan
	PT Auto-Correction	Supports gyroscope detection and self-calibration based on schedules and Patrol times.
	Other Function	3D Positioning, Auto Tracking, PTZ Limits, Initial Position
Video	Max. Image Resolution	2592×1944 (4:3)
	Primary Stream	60Hz: 60fps@(2592×1944, 2592×1520, 2048×1536, 1920×1080, 1280×960, 1280×720) 50Hz: 50fps@(2592×1944, 2592×1520, 2048×1536, 1920×1080, 1280×960, 1280×720)
	Secondary Stream	60Hz: 60fps@(704×576, 640×480, 640×360) 50Hz: 50fps@(704×576, 640×480, 640×360)
	Tertiary Stream	60Hz: 30fps@(2048×1536, 1920×1080, 1600×1200, 1280×720, 704×576, 640×480, 640×360) 50Hz: 25fps@(2048×1536, 1920×1080, 1600×1200, 1280×720, 704×576, 640×480, 640×360)
	Quaternary Stream	60Hz: 30fps@(1920×1080, 704×576, 640×480, 640×360) 50Hz: 25fps@(1920×1080, 704×576, 640×480, 640×360)
	Video Compression	H.265+/H.265(HEVC)/H.264+/H.264/MJPEG
	Video Bit Rate	16Kbps~16Mbps (CBR/VBR Adjustable)
Image	Privacy Masking	Up to 8 Areas (Mask Area and Mosaic Area are optional)
	ROI	Up to 8 areas
	Image Setting	Saturation/Brightness/Contrast/Sharpness
	Defog	Digital defog
	Image Stabilization	EIS (enhanced by gyroscope to improve performance)
	Image Enhancement	BLC, HLC, 2D DNR, 3D DNR, AGC, AWB, Deblur, Anti-flicker, Corridor Mode, LDC
	Regional Exposure	Support
	Regional Focus	Support
Network	Network Storage	NAS(Support NFS, SMB/CIFS), ANR
	Protocol	IPv4/IPv6, ARP, TCP, UDP, RTCP, RTP, SRTP, RTSP, RTSPS, RTMP, HTTP, HTTPS, DNS, DDNS, DHCP, FTP, NTP, SMTP, SNMP, UPnP, Bonjour, LLDP, SIP, VPN, PPPoE, VLAN, 802.1x, QoS, IGMP, ICMP, SSL, TLS 1.2
Interface	Ethernet	1 RJ45 10M/100M Ethernet Port
	Alarm I/O	2 inputs, 2 outputs
	Audio I/O	1 input, 1 output
	RS485	1 × RS485, half duplex, protocols: Pelco-P, Pelco-D, MS-Solar Power (proprietary)
Audio	Audio Compression	G.711-ULaw/G.711-ALaw/AAC LC/G.722/G.726
	Audio Sampling Rate	G.711-ULaw/G.711-ALaw/AAC LC: 8/16/32/44.1/48KHz G.722 16KHz / G.726: 8KHz

	Audio Bit Rate	16~256kbps
Intelligent Analytics	Video Analysis	VCA 3.0: Intrusion Detection, Region Entrance, Region Exiting, Advanced Motion Detection, Line Crossing, Loitering, Object Left, Object Removed
	Attribute Extraction	Supports simultaneous detection of up to 50 targets; real-time capture of humans and vehicles. Recognizes attributes: upper/lower clothing color, hat, vehicle type (bicycle, car, motorcycle, bus, truck, e-scooter).
	Face Detection & Face Attribute Recognition	Supports real-time face detection and snapshot. Recognizes face attributes: age, gender, glasses, mask, cap.
	Object Counting & Report	Supports line crossing counting for humans and vehicles; regional people counting for up to 4 areas.
	PPE Detection	Supports detection of safety hat and reflective vest usage; alarm is triggered for non-compliance.
	Privacy Protection	Supports automatic mosaic overlay for faces and human bodies. Supported on main/sub stream; compatible with H.265/H.264.
	Fall Detection	Supports detection of human falls; alarm trigger.
	Violence Detection	Supports detection of violent behavior; alarm trigger.
Event	One-Click Disarm	Support
	Basic Event	Motion Detection, Tamper Detection, Audio Alarm, External Input, External Output etc.
	Exception	Network Disconnection, IP Address Conflict, Record Failed, SD Card Full, SD Card Uninitialized, SD Card Error, No SD Card, etc.
	Event Action	FTP Upload Record, Snapshot, SMTP Upload Record, SD Card Record, External Output, Play Audio, SIP Phone, HTTP Notification, etc.
System	On-board Storage	Support Micro SD/SDHC/SDXC Card Local Storage, up to 1TB
	Reset Button	Support
	Watermark	Support
	SIP/VoIP Support	Yes, Voice & Video-over-IP
	System Compatibility	ONVIF Profile G & M & S & T, Milesight API
	Power Meter	Supports display of real-time, average, max power, and supply type. Supports power usage reports (30-min, 1h, 1d, 1 week, monthly).
	Battery System	Battery status display and alarm (requires Milesight Solar Power System)
	GPS	Support
General	Working Temperature	-40℃ to 70℃ (-40°F to 158°F)
	Working Humidity	0~95% RH (Non-condensing)
	Power Supply	PoE(802.3at) Class4 / DC12V±30%
	Power Consumption	Min.: 3.46W (DC), 4.2W (PoE+) Max.: 15.49W (DC), 21W (PoE+), IR on, PTZ working, lens heating on 24 Hour Average: 6.68W (DC), 7.75W (PoE+)
	Net Weight	3.1 kg (6.83 lb)
	Gross Weight	4.4 kg (9.7 lb)

	Heating	Built-in heating glass for effective defog, max 1.4W
	Dimensions	Ø 173 mm × 285 mm
	Warranty	2 Years/3 Years(Optional)
Certifications	EMC	CE-EMC(EN IEC 61000-3-2:2019+A2:2024, EN 61000-3-3:2013+A2:2021+AC:2022-01, EN 55032:2015+A1:2020, EN 55035:2017+A11:2020) FCC 47 CFR Part 15 Subpart B
	Safety	CE-LVD (EN IEC 62368-1:2024 + A11:2024)
	Protection	IP66 (IEC 60529:2019) IK10 (IEC 62262:2021, excluding glass window)

Structure Diagrams

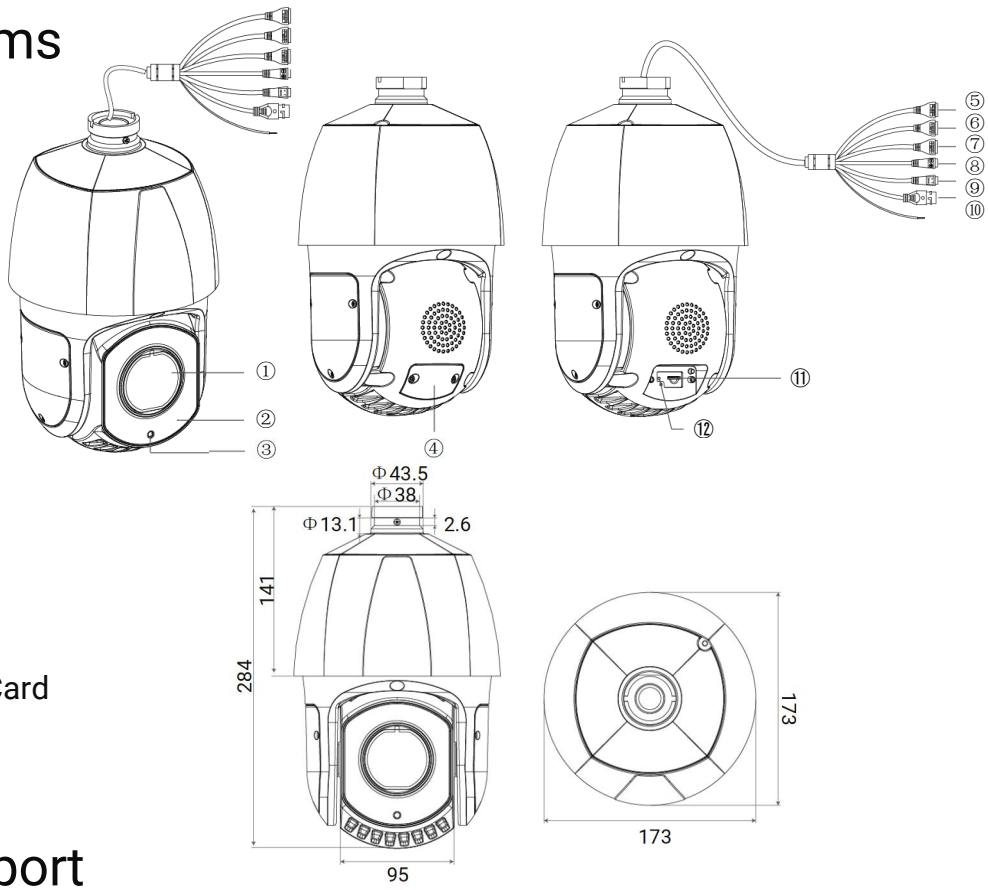

1. Lens
2. IR Light
3. Light Sensor
4. Micro SD/SDHC/ SDXC Card Slot Cover
5. Audio In/Out
6. Alarm In/Out
7. Alarm In/Out
8. DC 12V
9. RS485
10. LAN
11. Micro SD/SDHC/SDXC Card
12. Reset Button

Accessories Support

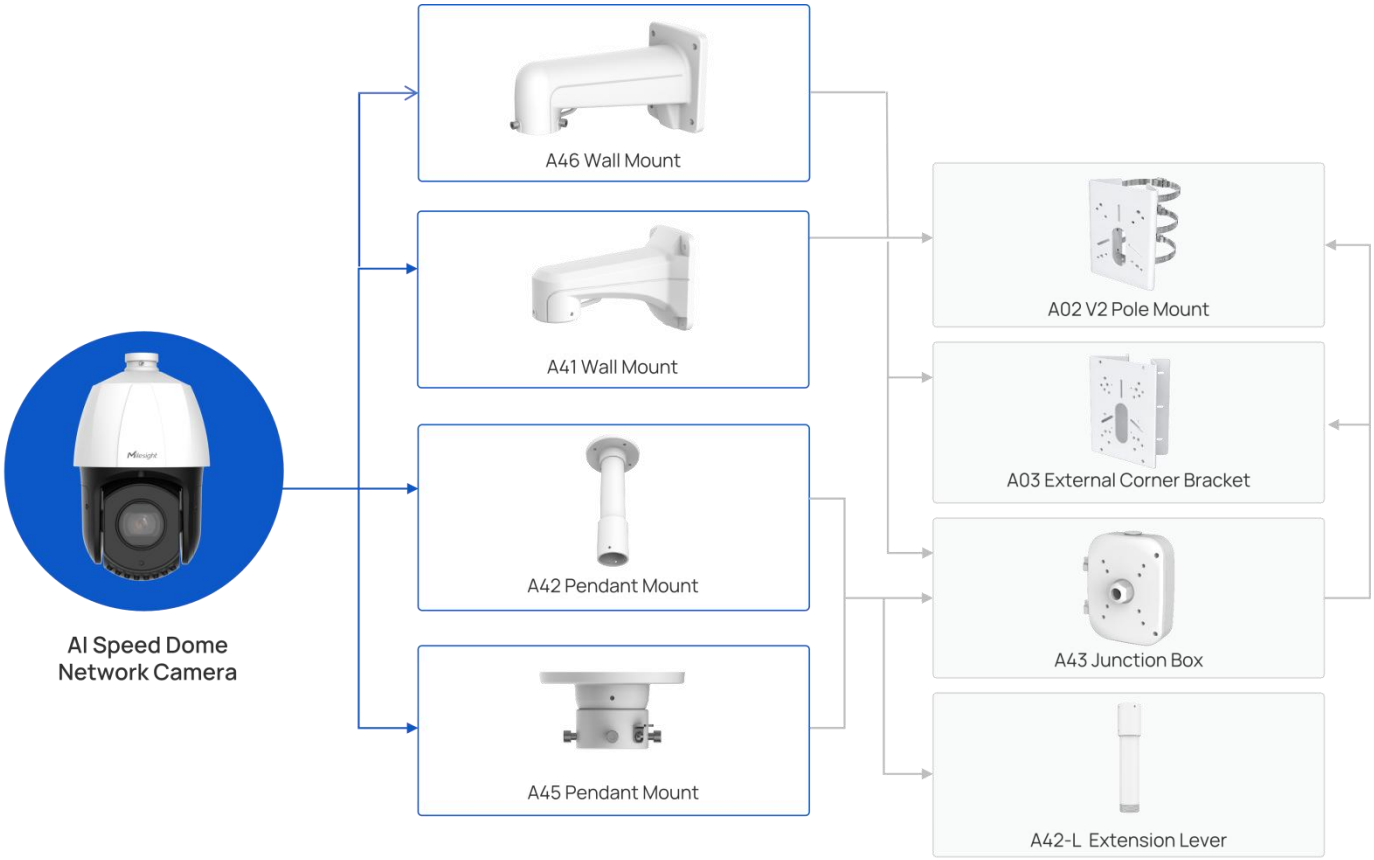

Add: Building C09, Software Park Phase III, Xiamen 361024, Fujian, China
Tel: +86-592-5922772 Contact Us: sales@milesight.com support@milesight.com